l'art®

DELUXE
SPECIFICATION SHEET

GALLERY & MUSEUM LIGHTING

DELUXE

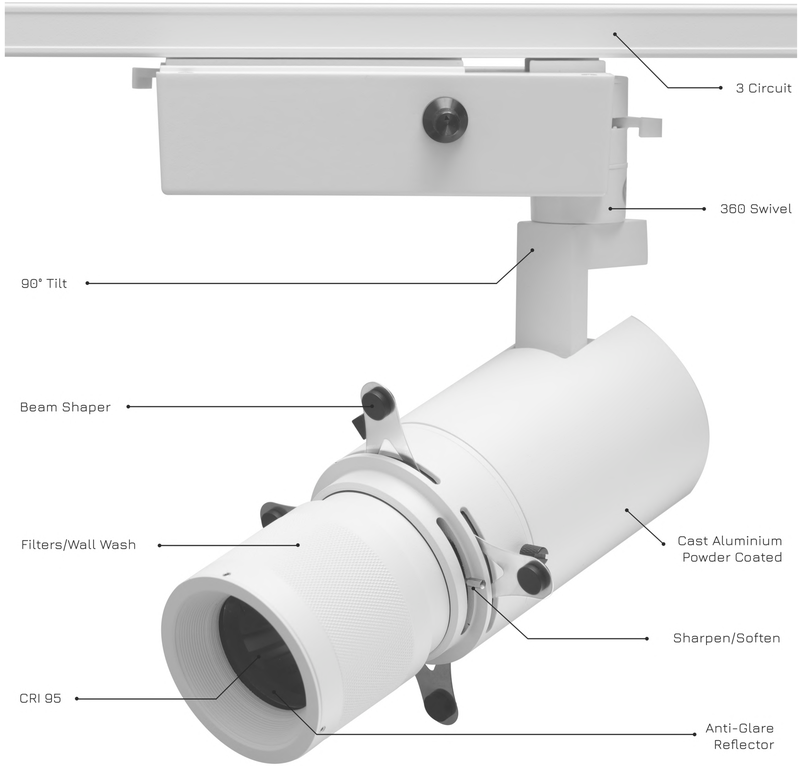

DELUXE

BL-DX-1C-X20-WH-120

Three Circuit

Different lights can be turned ON/OFF on the same track, the dimming is done on the fitting itself via the knob.

90° Tilt/360 Swivel

You can tilt the light up and down pointing in closer to the object that you need to illuminate. Swivel You can swivel the the light 360° giving a full range of motion.

CRI 95

Colour Rendering Index of 95 is the quality of the LED that is used. This means the colours of the art work remain vibrant.

Cast Aluminium, Powder Coated

The body of the luminaire is a strong cast aluminum with a matte finish powder coat.

Beam Shaper

Frame the art so it appears the artworks are back lit. Frame as small as 4 x 4inch and upto 10 x 6foot art-works from just one light fitting.

Sharpen/Soften

This button allows you to sharpen the edge of the framed light or soften the degree of faded/soft edges.

Color Filters

The Deluxe comes with up to 16 different colored filters to shine on objects and artwork.

DELUXE INSTALLATION:

Distance from Wall:

The best mounting is 3.2 ft - 50 ft distance away from the artworks. This product can shape art from a long distance.

Mounting Height:

Mounting Height is flexible from 7 ft - 50 ft height.

Distance Apart:

The deluxe can be installed 3 ft distance apart because of the wide wall wash and art shaping design.

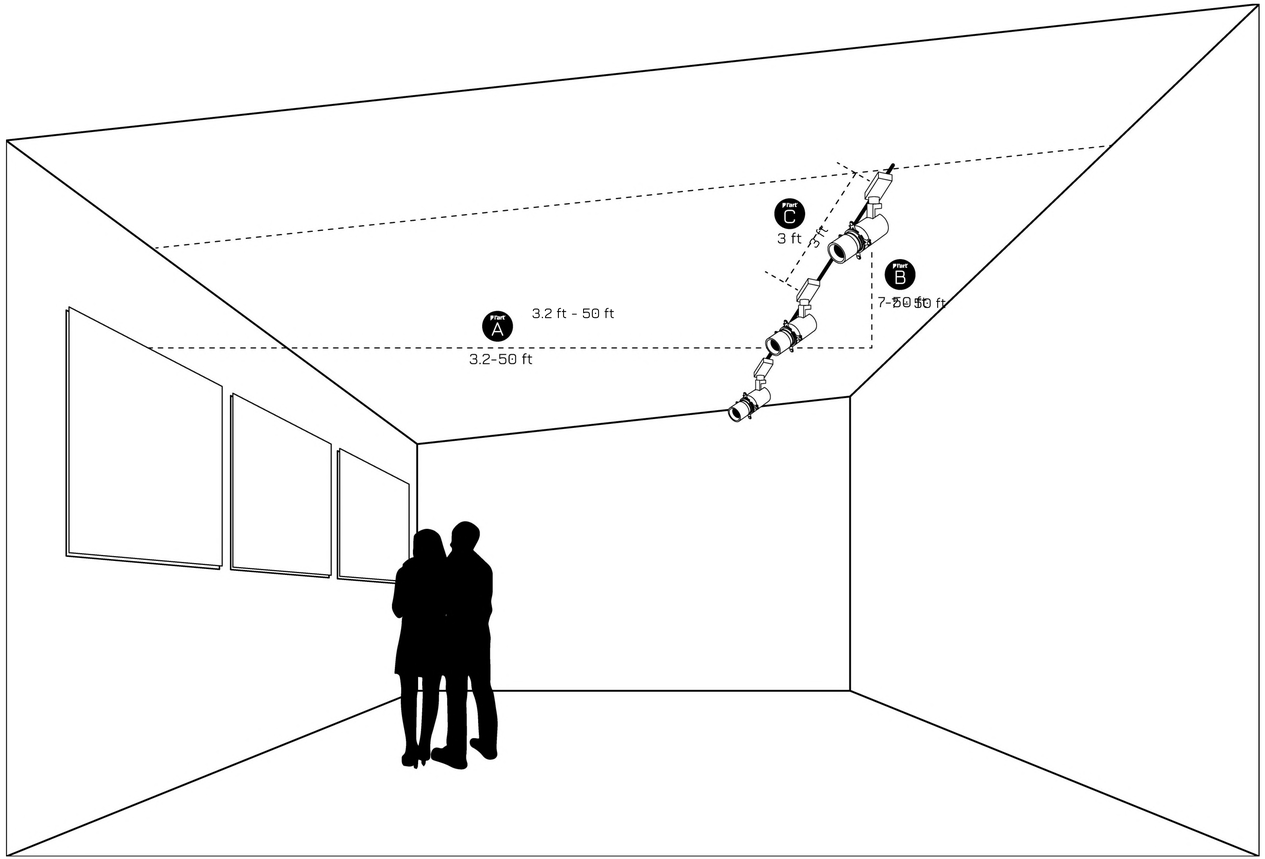

DELUXE SPECIFICATIONS:

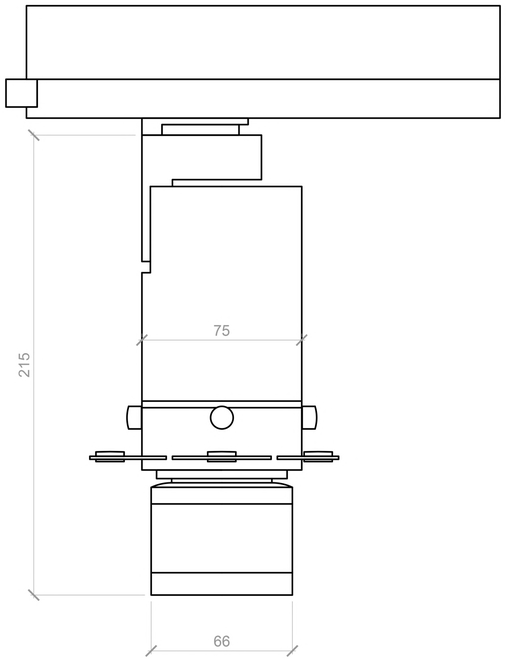

DELUXE

BL-DX-1C-X20-WH-120

Fitting Colour	Black or White
Light Source	COB LED
Colour Temperature	Warm White 3000K or Cool White 5500K
Mounting Method	Single Circuit
Voltage	120V
Dimensions	See Schematic
Tilt, Rotate, Angle	90°, 350°
Beam Angle	Zoom / framing tool

Power	20W
CRI	95
Lumen Output	1100lm
Average Lifespan	50,000 Hours
Dimming Options	1-10V onboard dimming
Trim Colour	Black or White
Product Warranity	5 Years Manufactures Warranty
Waterproof Rating	IP20 for indoor use only

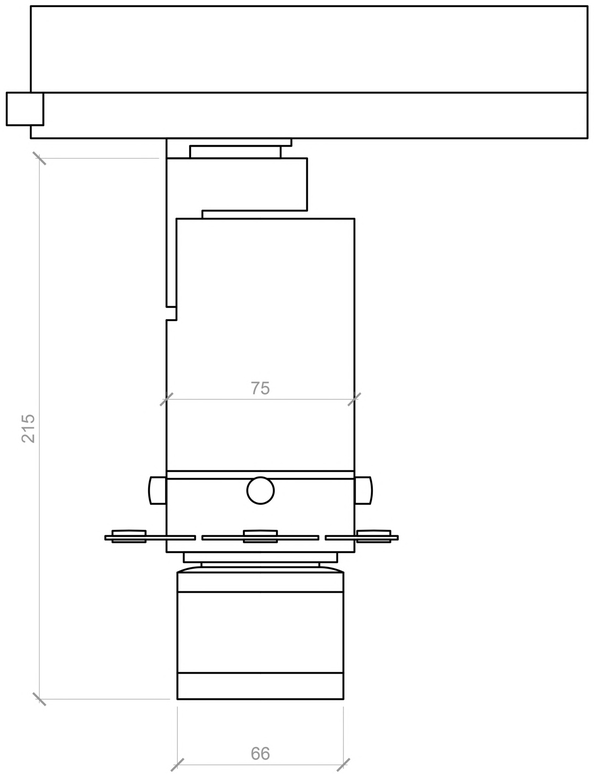
75
215
66

DELUXE LIGHTING EFFECTS

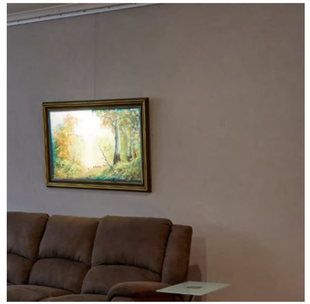

l'art®
GALLERY&
MUSEUM
LIGHTING

BANNOLIGHTING.COM
INFO@BANNOLIGHTING.COM
PH: 347 308 6016

BANNO LIGHTING
172 SUYDAM ST UNIT 4 R
BROOKLYN, NEW YORK, 11221