l'art®

MINI ZOOM
SPECIFICATION SHEET

GALLERY & MUSEUM LIGHTING

SERIOUSLY SMALL

MINI ZOOM

MINI ZOOM

BL-M-ZM-1C-X4W-BL-48V (4W Model)
BL-M-ZM-1C-X2W-BL-48V (2W Model)

48V Mini Track

Super Slim magnetic track means it's easy to hide the track with a super thin profile. No clips or aligning pins needed with this state of the art mini magnetic track system.

90° Tilt/360 Swivel

You can tilt the light up and down pointing in closer to the object that you need to illuminate. Swivel You can swivel the the light 360° giving a full range of motion.

Glare Control

This additional filter allows you to soften light before it illuminates artwork. It also adds a second layer of anti-glare protection, which can cause eyestrain for customers.

Cast Aluminium, Powder Coated

The body of the luminaire is a strong cast aluminum with a matte finish powder coat.

Wide/Narrow Beam Angle

A simple push pull control on the lens allows the beam angle to be adjusted from 5 degrees all the way up to 6 degrees. This enables one fixture to serve as a very narrow spot light, medium wash or wide wall wash to suit the artwork size.

CRI 90/95

The Colour Rendering Index (CRI) relates to LED quality. A high CRI of 95 means the LED displays artwork colours as they would appear in natural daylight.

Phase Dimming

These lights are dimmed at the wall via phase dimming.

MINI ZOOM INSTALLATION PROCESS

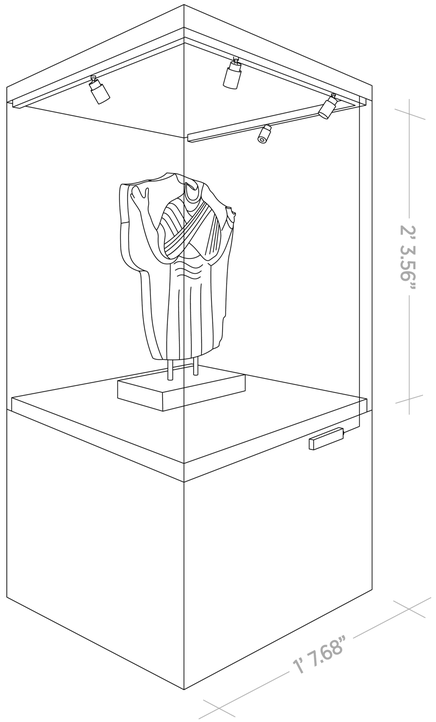

1 Join lengths of tracks to your desired length with straight or L joiners.

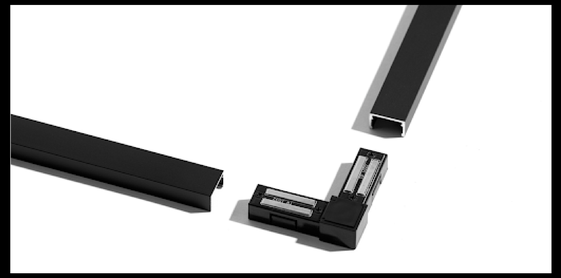

2 Peel back the double sided tape and stick track to your desired surface.

3 Clip lights into the track

4 Tilt the light in the direction you want it to illuminate

5 Adjust the beam angle to be more narrow or wide depending on size of object.

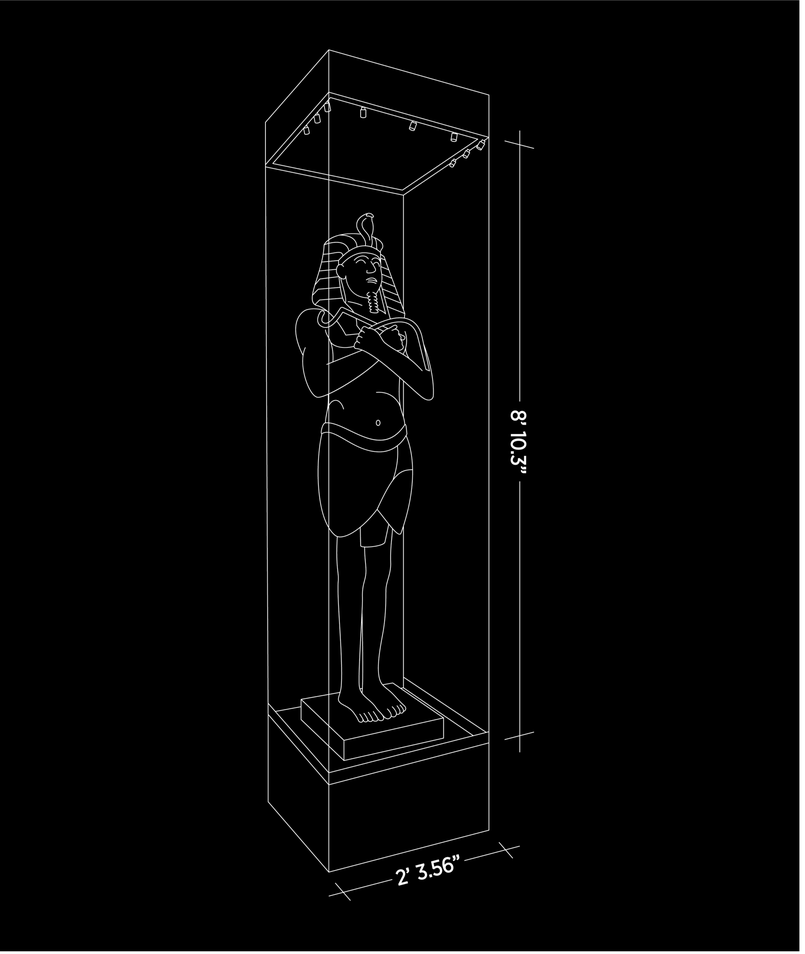
8' 10.3"
2' 3.56"

MINI ZOOM SPECIFICATIONS:

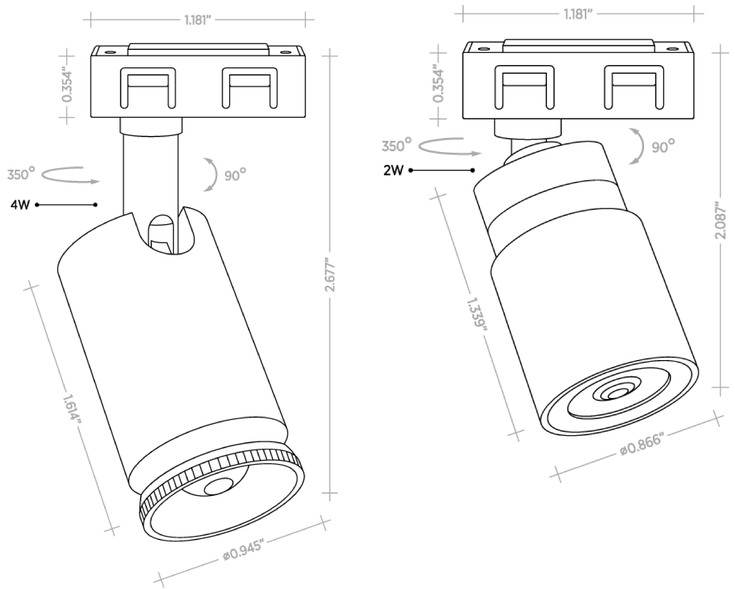

MINI ZOOM

BL-M-ZM-1C-X4W-BL-48V (4W Model)
BL-M-ZM-1C-X2W-BL-48V (2W Model)

Fitting Colour	Black or White
Light Source	COB LED
Colour Temperature	CCT 3000K Other color temperatures available upon request
Mounting Method	48V Mini Track
Voltage	48V (external driver)
Dimensions	See Schematic
Tilt, Rotate, Angle	90°, 350°
Beam Angle	5° - 60°

Power	2W or 4W
CRI	90/95
Lumen Output	250lm 600lm
Average Lifespan	50,000 Hours
Dimming Options	Phase Dimming at the Wall Standard
Trim Colour	Black or White
Product Warranity	3 Years Manufactures Warranty
Waterproof Rating	IP20 for indoor use only

RAIL SYSTEM & IT'S ACCESSORIES (OPTIONAL)

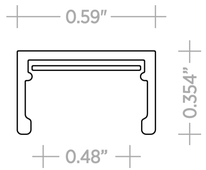

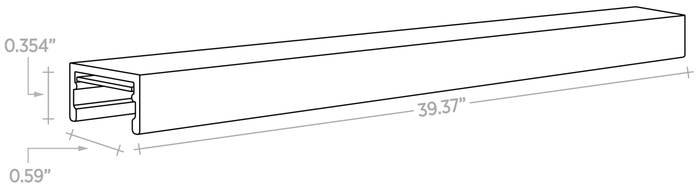

TR102 Aluminum Rail
(Magnetic installed)

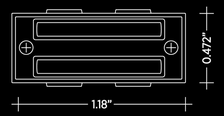

Straight connector

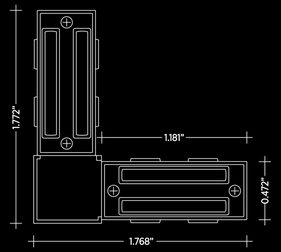

90° connector

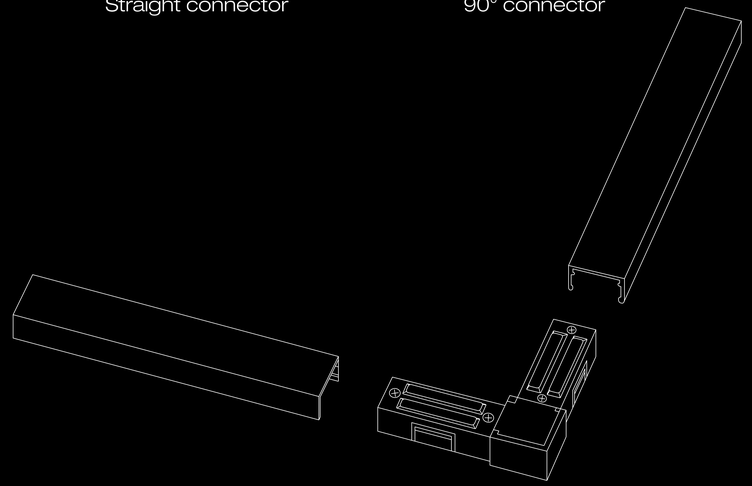

90° connector

l'art®
GALLERY&
MUSEUM
LIGHTING

BANNOLIGHTING.COM
INFO@BANNOLIGHTING.COM
PH: 347 308 6016

BANNO LIGHTING
172 SUYDAM ST UNIT 4 R
BROOKLYN, NEW YORK, 11221