# l'art®

MULTI
SPECIFICATION SHEET

# GALLERY & MUSEUM LIGHTING

# MULTI

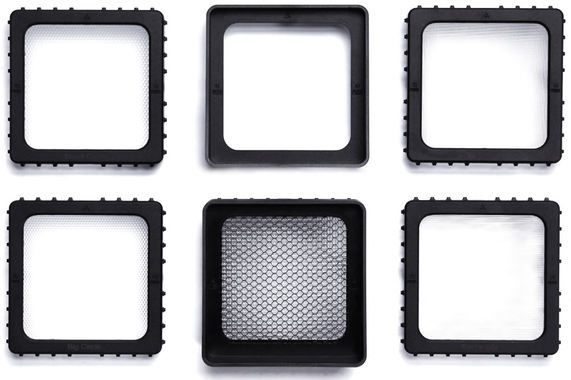

# MULTI

## BL-MT-1C-X25-WH-120

### Single Circuit Track

Single circuit track is the standard, and means that all lights within the same circuit will turn on, off, and dim at the same time.

### 90° Tilt/360 Swivel

You can tilt the light up and down pointing in closer to the object that you need to illuminate. Swivel You can swivel the the light 360° giving a full range of motion.

### 1-10V Onboard Dimming

Onboard dimming is manually controlled on the back of the light fitting. It allows individual dimming from 0-100% of each luminaire, meaning you can choose a unique light level for each piece of artwork creating a layered lighting scheme. This dimming method can't be used on the same track as phased dimming fittings.

### 6 Changeable Lenses

The honeycomb filter reduces glare and gives a very wide and high wall wash (up to 7 ft wide and 7 ft high). Other lenses include a narrow spot, small square, large square, wide line and medium wash, which are all easy to click and out in seconds.

### CRI 95

The Colour Rendering Index (CRI) relates to LED quality. A high CRI of 95 means the LED displays artwork colours as they would appear in natural daylight.

### Cast Aluminium, Powder Coated

The body of the luminaire is a strong cast aluminum with a matte finish powder coat.

# MULTI INSTALLATION:

**Distance from Wall:**

The best mounting is 3.2 ft - 14 ft distance away from the artworks.

**Mounting Height:**

Mounting Height is flexible 7 ft - 16 ft height but ideally if you can 1.60ft above the top of the artwork frame.

**Distance Apart:**

The multi can be installed 3.2 ft distance apart. The wall wash feature spreads very wide and high.

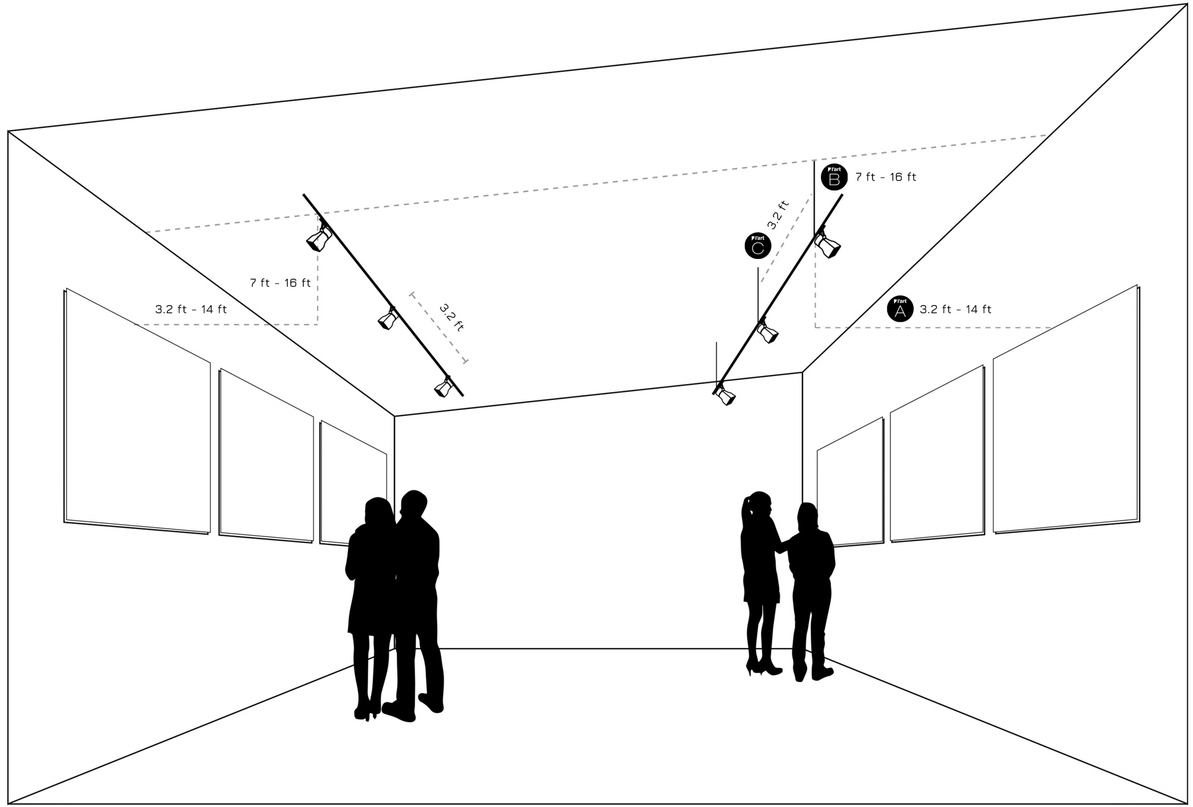

# MULTI SPECIFICATIONS:

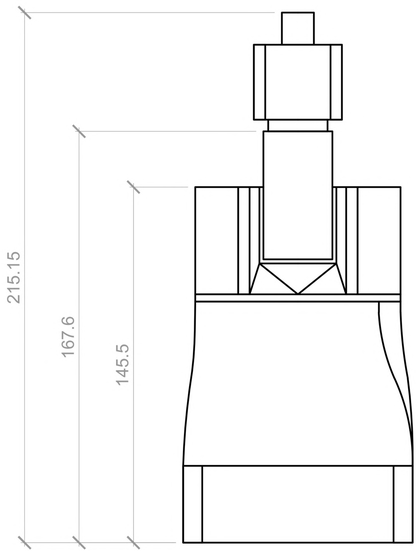


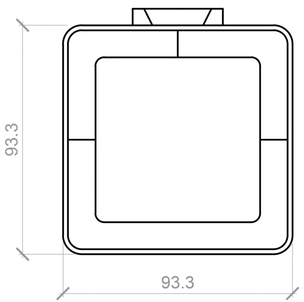


## MULTI

BL-MT-1C-X25-WH-120

| | |
|---|---|
| Fitting Colour | Black or White |
| Light Source | COB LED |
| Colour Temperature | CCT 3000K<br>Other color temperatures available upon request |
| Mounting Method | Single Circuit Track |
| Voltage | 120V |
| Dimensions | See Schematic |
| Tilt, Rotate, Angle | 90°, 350° |
| Beam Angle | Range of filters |

| | |
|---|---|
| Power | 30W |
| CRI | 95 |
| Lumen Output | 2630lm |
| Average Lifespan | 50,000 Hours |
| Dimming Options | 1-10V Onboard Dimming |
| Trim Colour | Black or White |
| Product Warranity | 5 Years Manufactures Warranty |
| Waterproof Rating | IP20<br>for indoor use only |

# MULTI FILTER PACKAGE

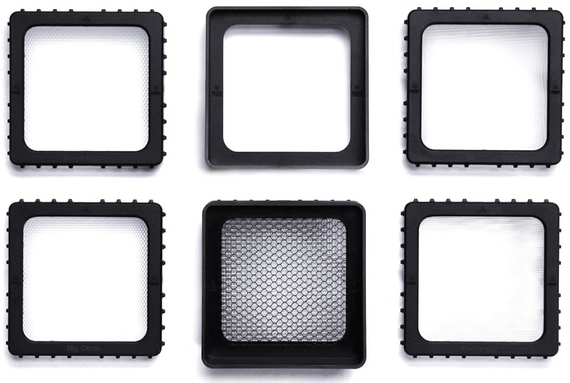

**6 Changeable Lenses**

The honeycomb filter reduces glare and gives a very wide and high wall wash (up to 7 ft wide and 7 ft high). Other lenses include a narrow spot, small square, large square, wide line and medium wash, which are all easy to click and out in seconds.

l'art
FLITER
PACKAGE

# l'art®
GALLERY&
MUSEUM
LIGHTING

BANNOLIGHTING.COM
INFO@BANNOLIGHTING.COM
PH: 347 308 6016

BANNO LIGHTING
172 SUYDAM ST UNIT 4 R
BROOKLYN, NEW YORK, 11221