l'art®

ZOOM
SPECIFICATION SHEET

GALLERY & MUSEUM LIGHTING

ZOOM

l'art
ZOOM MINI
NOW AVAILABLE

ZOOM

BL-ZM-1C-X25-WH-120

Single Circuit

Single circuit track is the standard, and means that all lights within the same circuit will turn on, off, and dim at the same time.

90° Tilt/360 Swivel

You can tilt the light up and down pointing in closer to the object that you need to illuminate. You can swivel the light 360° giving a full range of motion.

Honeycomb Glare Control

This additional filter allows you to soften light before it illuminates artwork. It also adds a second layer of anti-glare protection, which can cause eyestrain for customers.

Cast Aluminium, Powder Coated

The body of the luminaire is a strong cast aluminum with a matte finish powder coat.

Wide/Narrow Beam Angle

A simple dial control on the lens allows the beam angle to be adjusted from 10 degrees all the way up to 90 degrees. This enables one fixture to serve as a very narrow spot light, medium wash or wide wall wash to suit the artwork size.

CRI 95

The Colour Rendering Index (CRI) relates to LED quality. A high CRI of 95 means the LED displays artwork colours as they would appear in natural daylight.

Phase Dimming

These lights are dimmed at the wall via phase dimming, which means that power in the track is lowered so that the light output is reduced.

ZOOM INSTALLATION:

Distance from Wall:

The best mounting is 3 ft - 10 ft distance away from the artworks.

Mounting Height:

Mounting Height is flexible 8 ft - 10 ft height but ideally if you can 1.7ft / 50cm above the top of the artwork frame.

Distance Apart:

The zoom can be installed 4 ft distance apart and the zoom lens (narrow to wide) does the work.

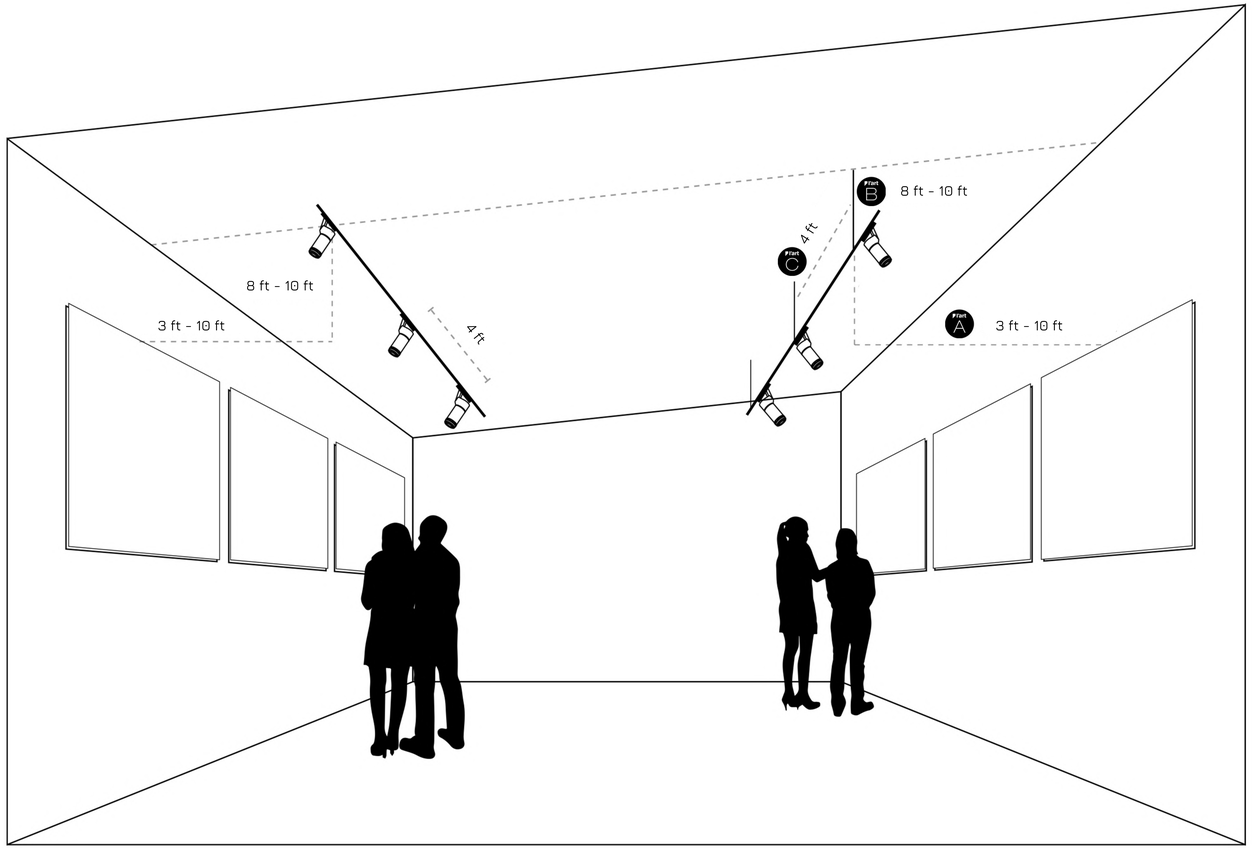

ZOOM SPECIFICATIONS:

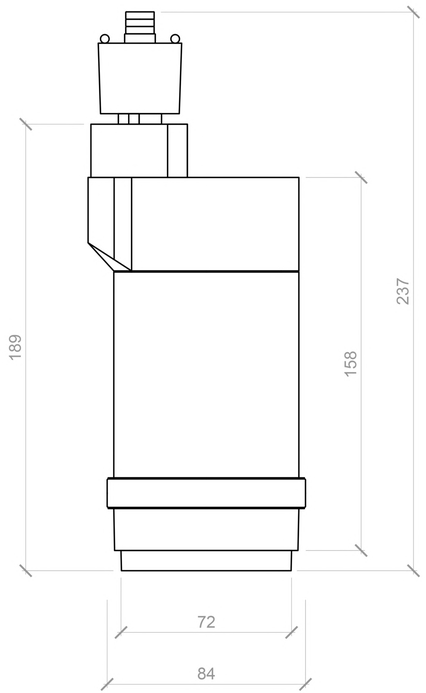

ZOOM

BL-ZM-1C-X25-WH-120

Fitting Colour	Black or White
Light Source	COB LED
Colour Temperature	CCT 3000K Other color temperatures available upon request
Mounting Method	3 Wire Single Circuit Track
Voltage	120V
Dimensions	See Schematic
Tilt, Rotate, Angle	90°, 350°
Beam Angle	10° - 90°

Power	30W
CRI	95
Lumen Output	2850lm
Average Lifespan	50,000 Hours
Dimming Options	Phase Dimming at the Wall Standard
Trim Colour	Black or White
Product Warranity	5 Years Manufactures Warranty
Waterproof Rating	IP20 for indoor use only

ZOOM FILTER PACKAGE

The filter packs are available as an additional purchase of $155. They easily snap into place on the very front of the zoom lens to give you additional lighting effects when you shine the light toward your artworks. These filters include wide wall wash, square, landscape (vertical/horizontal), and small and large circle.

l'art
FLITER PACKAGE
$155

COMMERCIAL USE

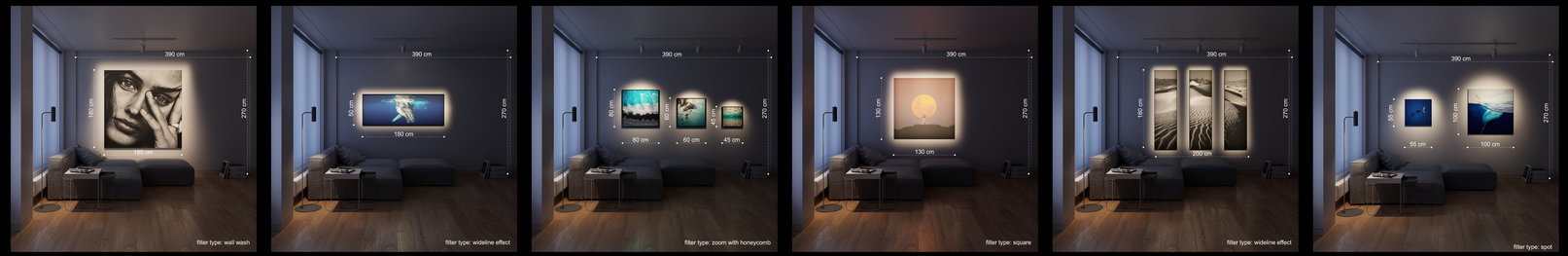

RESEDENTIAL USE

l'art®
GALLERY&
MUSEUM
LIGHTING

BANNOLIGHTING.COM
INFO@BANNOLIGHTING.COM
PH: 347 308 6016

BANNO LIGHTING
172 SUYDAM ST UNIT 4 R
BROOKLYN, NEW YORK, 11221